Aerfoam 200 T-Piece

Article number: 188268

Product overview

The Aerfoam 200 mm T-Piece allows branching in the Aerfoam system. Made of expanded polyethylene (EPE) duct, which minimises the risk of condensation and energy loss. It is very light and extremely easy and safe to install. All Aerfoam parts connect to each other using strong, airtight mechanical connections. They can also be securely mounted to walls or ceilings using brackets. Aerfoam is ideal for both central mechanical ventilation and domestic hot water heat pump systems.

- Insulated to minimise the risk of condensation and energy loss.
- Easy mechanical connection and mounting.
- Lightweight and easy to cut, ensuring quick installation.
- Impact resistant.

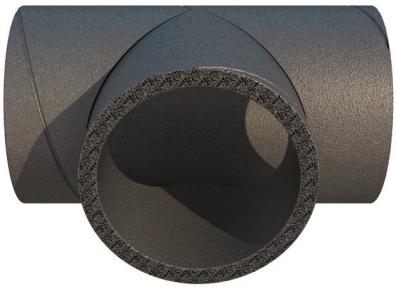

Product dimensions

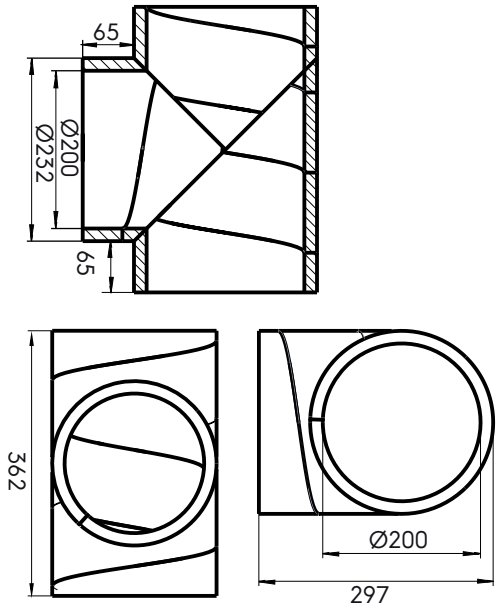

© 2026 Ubbink. All rights reserved.| Content is subject to change without notice. Availability and configurations may differ per country. | UB-17-09-2026-UK-EN

Aerfoam 200 T-Piece

Article number: 188268

Technical specifications

Technical	
Colour	Grey
Insulated	☑
Diameter inner	200 mm
Insulation thickness	16 mm
Performance	
Insulation performance	NaN
Zeta supply 1 connection	0.099
Dimensions	
Length gross	362 mm
Width	232 mm
Height	297 mm
Net weight	0.132 kg

© 2026 Ubbink. All rights reserved.| Content is subject to change without notice. Availability and configurations may differ per country. | UB-17-09-2026-UK-EN