Aerfoam 160 T-Piece

Article number: 188266

Product overview

The Aerfoam 160 mm T-Piece allows branching in the Aerfoam system. Made of expanded polyethylene (EPE) duct, which minimises the risk of condensation and energy loss. It is very light and extremely easy and safe to install. All Aerfoam parts connect to each other using strong, airtight mechanical connections. They can also be securely mounted to walls or ceilings using brackets. Aerfoam is ideal for both central mechanical ventilation and domestic hot water heat pump systems.

- Insulated to minimise the risk of condensation and energy loss.
- Easy mechanical connection and mounting.
- Lightweight and easy to cut, ensuring quick installation.
- Impact resistant.

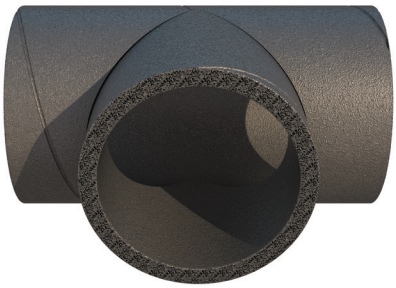

Product dimensions

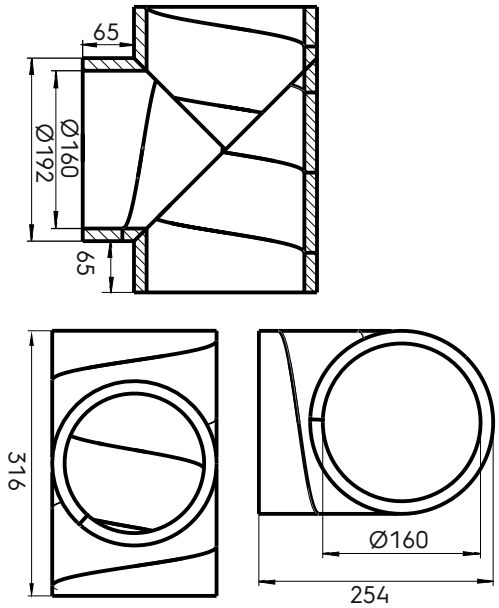

© 2026 Ubbink. All rights reserved.| Content is subject to change without notice. Availability and configurations may differ per country. | UB-18-09-2026-UK-EN

Aerfoam 160 T-Piece

Article number: 188266

Technical specifications

Technical	
Colour	Grey
Insulated	☑
Diameter inner	160 mm
Insulation thickness	16 mm
Performance	
Insulation performance	NaN
Zeta supply 1 connection	0.17
Dimensions	
Length gross	316 mm
Width	192 mm
Height	254 mm
Net weight	0.25 kg

© 2026 Ubbink. All rights reserved.| Content is subject to change without notice. Availability and configurations may differ per country. | UB-18-09-2026-UK-EN