# Aerfoam 200 Bend 15°

Article number: 188228

## Product overview

The Aerfoam 200 mm 15° bend allows directional changes within the Aerfoam system. Made of expanded polyethylene (EPE) duct, it minimises the risk of condensation and energy loss. It is very light and extremely easy and safe to install. All Aerfoam parts connect to each other using strong, airtight mechanical connections. They can also be securely mounted to walls or ceilings using brackets. Aerfoam is ideal for both central mechanical ventilation and domestic hot water heat pump systems.

- Insulated to minimise the risk of condensation and energy loss.
- Easy mechanical connection and mounting.
- Lightweight and easy to cut, ensuring quick installation.
- Impact resistant.

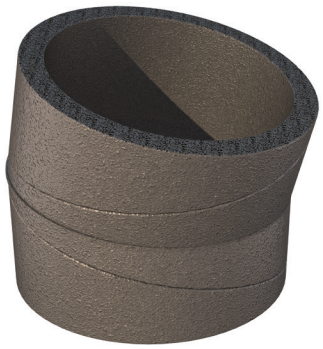

## Product dimensions

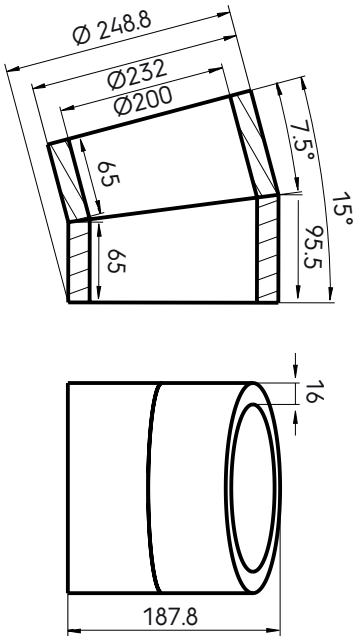

© 2026 Ubbink. All rights reserved.| Content is subject to change without notice. Availability and configurations may differ per country. | UB-18-09-2026-UK-EN

# Aerfoam 200 Bend 15°

Article number: 188228

## Technical specifications

| Technical | |
|---|---|
| Colour | Grey |
| Insulated | ☑ |
| Diameter inner | 200 mm |
| Diameter outer | 232 mm |
| Insulation thickness | 16 mm |
| **Performance** | |
| Insulation performance | 0.041 W/m.K |
| Temperature resistance (min.) | -30 °C |
| Temperature resistance (max.) | 60 °C |
| Installation temperature (min.) | -30 °C |
| Installation temperature (max.) | 60 °C |
| Zeta supply 1 connection | 0.22 |
| Zeta extract 1 connection | 0.22 |
| **Dimensions** | |
| Length gross | 249 mm |
| Width | 232 mm |
| Height | 188 mm |
| Net weight | 0.062 kg |

© 2026 Ubbink. All rights reserved.| Content is subject to change without notice. Availability and configurations may differ per country. | UB-18-09-2026-UK-EN

# Aerfoam 200 Bend 15°

Article number: 188228

## Technical details

| DN200 15° Bend | | |
|---|---|---|
| Zeta [-] | 0,15 | |
| Qv [m³/h] | Δp [Pa] | V [m/s] |
| 50 | 0,02 | 0,44 |
| 100 | 0,07 | 0,88 |
| 150 | 0,16 | 1,33 |
| 200 | 0,28 | 1,77 |
| 250 | 0,44 | 2,21 |
| 300 | 0,63 | 2,65 |
| 350 | 0,86 | 3,09 |
| 400 | 1,13 | 3,54 |
| 450 | 1,42 | 3,98 |
| 500 | 1,76 | 4,42 |
| 550 | 2,13 | 4,86 |
| 600 | 2,53 | 5,31 |
| 650 | 2,97 | 5,75 |
| 700 | 3,45 | 6,19 |
| 750 | 3,96 | 6,63 |
| 800 | 4,5 | 7,07 |
| 850 | 5,08 | 7,52 |
| 900 | 5,7 | 7,96 |

© 2026 Ubbink. All rights reserved.| Content is subject to change without notice. Availability and configurations may differ per country. | UB-18-09-2026-UK-EN